EB195

Electric Dropbolt

- Operating voltage 12~24Vdc
- Stainless Steel
- Fail-Safe *(Power to Lock)*
- Vandal resistant
- Built-in logical circuitry
- Auto-relocking timer delay: 0, 3, 6 or 9 seconds

VANDAL RESISTANT

STAINLESS STEEL

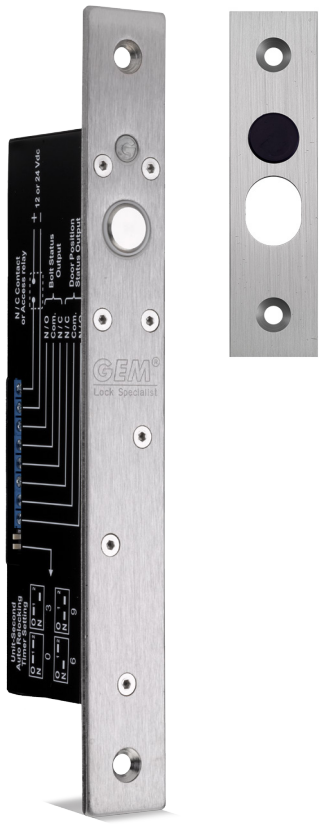

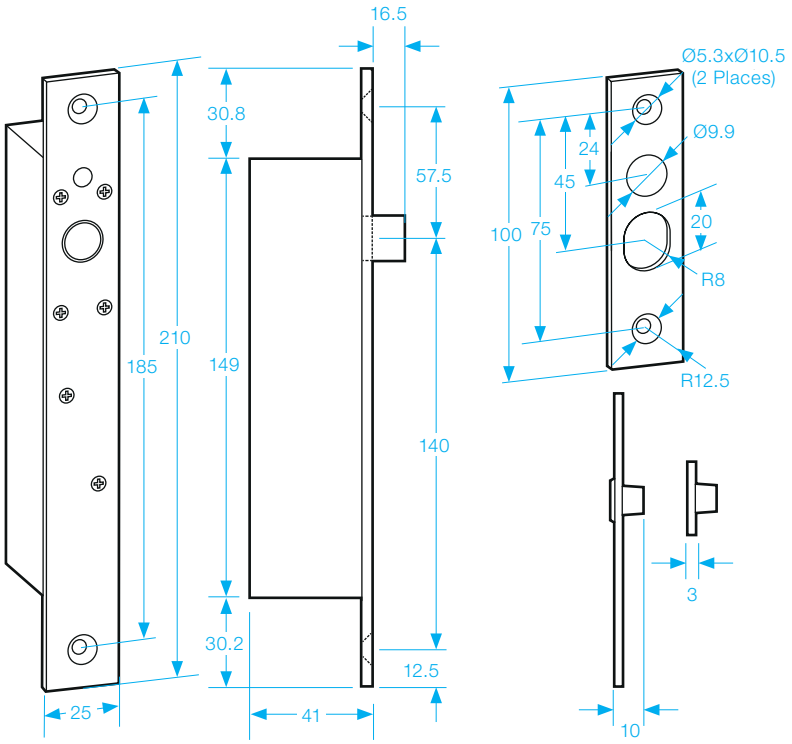

AUTO RELOCKING TIMER SETTINGS

Use jumpers to adjust the time between 0 to 9 seconds for door locking time delay. This is the time, which takes the dropbolt to automatically lock after the door is closed.

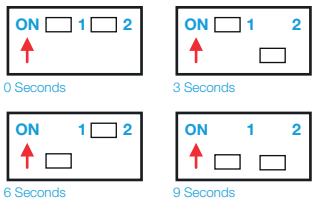

SPECIFICATION

- Voltage tolerance: ±10%.
- Current draw: Pull in 0.9A, Holding 0.3A at 12Vdc *(at temperature 20°C)*.
- Operating temperature: -10~45°C *(14 to 131°F)*.
- Lock's surface temperature: Current temperature ±20% *(when power is on)*.
- Magnetic bolt status output indicates bolt locked or unlocked status *(SPDT rated 3A at 30Vdc)*.
- Humidity: 0~95% non-condensing.
- Horizontal or vertical installation.
- Face plate material: Stainless Steel
- Tested to 500,000 cycles.
- Weight: 0.6kg *(approx)*.

All dimensions in mm